FIRE ALARM SYSTEM

with SMS Alert Notification

Danial Hossain, Toufikul Alam Yame, Md Salah Uddin Yousuf

Roll: 20230104058, 20230104070, 20230104074

Department of Computer Science and Engineering

CSE 3118: MNM Lab — Spring 2025

Abstract—Fire outbreaks cause devastating loss of life and property, often due to delayed detection and response. This project presents a low-cost, automated Fire Alarm System with SMS Alert Notification that enables real-time fire detection and instant remote alerting. Using flame and smoke sensors interfaced with an Arduino microcontroller, the system activates a local buzzer and simultaneously sends an automated SMS to pre-registered contacts via an ESP32 upon detecting a fire event. The system is energy-efficient, internet-dependent, and scalable across residential, commercial, and industrial environments. It addresses key limitations of prior works by offering an affordable, multi-recipient notification solution deployable even in low-connectivity areas. The project demonstrates how embedded systems can significantly reduce fire response time and contribute to the protection of human life and property.

Index Terms—Fire alarm system, SMS notification, Arduino, ESP32, flame sensor, MQ-2 smoke sensor.

I. PROJECT OVERVIEW

This project presents the design and implementation of an automated Fire Alarm System integrated with an SMS alert feature. The system is engineered to detect fire or smoke in real-time within residential, commercial, or industrial premises and immediately notify the relevant stakeholders via text message. By combining sensor technology with an ESP32-based communication module, the system ensures that emergency alerts reach concerned individuals even when they are not physically present at the location.

The system utilizes flame and smoke sensors interfaced with an Arduino microcontroller that processes sensor data and triggers an alarm buzzer. Simultaneously, the microcontroller sends an automated SMS to pre-configured users account using an ESP32, informing recipients of the fire outbreak and the affected location. This dual-layer response — local alarm and remote notification — makes the system significantly more effective than traditional standalone alarms.

II. RELATED WORKS

A. IoT Based Smart Fire Detection and Control System

Chinchmalatpure, Sagar, and Lohe (2023) propose an IoT-based fire detection and control system using multiple sensors and a GSM module. The system sends real-time alert messages when fire is detected and activates a sprinkler mechanism to control fire spread. The work highlights early detection and automated response to reduce damage and loss. The GSM-based notification approach served as a key reference for the SMS alert architecture adopted in this project.

B. Smart Fire Detection Using Acoustic Measurements and Machine Learning

Martinsson et al. (2022) introduce a smart fire detection approach based on acoustic signal analysis combined with machine learning techniques. The system detects fire-related sound patterns and classifies them using trained models to improve detection accuracy. The study demonstrates that acoustic data can complement traditional sensor-based fire detection methods, inspiring the consideration of multi-modal sensing in future extensions of this project.

C. Computer Vision Based Early Electrical Fire Detection

Sridhar and Sathiya (2021) present an early fire detection system using computer vision techniques applied to video surveillance footage. The system analyzes visual features such as smoke and flame patterns to identify electrical fire incidents at an early stage. The approach improves detection speed and reduces reliance on physical sensors, providing insights into alternative detection paradigms beyond traditional IR/smoke sensors.

III. OBJECTIVE

The primary objectives of this project are as follows:

- To design and build a cost-effective, reliable, and real-time fire detection system.
- To integrate an SMS notification module that alerts designated contacts instantly upon fire detection.
- To minimize human casualties and property damage through early warning and rapid response.
- To provide an automated, low-maintenance safety solution suitable for both urban and rural environments.
- To ensure the system operates continuously and reliably without constant human supervision.
- To explore the use of IoT and embedded systems technology in solving real-world safety challenges.

IV. LIST OF TOOLS

A. Hardware Components

Arduino UNO — The main microcontroller. Reads sensor data, processes it, and triggers outputs (buzzer, LCD, WiFi alert). Operates at 5V and supports digital/analog I/O suitable for multi-sensor interfacing.

Fire Detection Module (IR Flame Sensor) — Detects actual flames by sensing infrared light emitted by fire. Sends a digital signal to Arduino when flame is detected within its sensing range.

Gas & Smoke Sensor (MQ-2/MQ-135) — Detects smoke, LPG, CO, or combustible gases in the air. Triggers an alert even before visible fire appears, providing early-stage warning capability.

LCD Display 20×4 — Displays real-time status messages such as "System OK", "Fire Detected!", or "Gas Leaked!" allowing users to read alerts locally without any external device.

ESP32 — Adds WiFi/Bluetooth capability to the system. Sends instant alerts to a smartphone or cloud dashboard when danger is detected, enabling remote notifications independent of GSM networks.

Active Buzzer — Produces a loud alarm the moment the Arduino detects fire or gas, providing immediate on-site auditory warning to occupants.

B. Software Tools

Arduino IDE 2.x — Firmware development environment for sensor calibration, logic programming, and serial debugging for both Arduino UNO and ESP32.

Proteus 8 Professional — Full circuit simulation and PCB schematic design tool used prior to hardware assembly to verify circuit correctness.

ESP32 Arduino Core — Core GPIO, ADC, I2C, UART, and interrupt APIs enabling seamless integration of the ESP32 with Arduino-compatible libraries.

V. WORKING PROCEDURE

The fire alarm system operates through the following sequential stages:

A. Sensor Input

Flame sensors and smoke/gas sensors (MQ-2 or similar) are placed at strategic locations. These sensors continuously monitor their surroundings for abnormal heat levels, open flames, or smoke particles. When detected values exceed a predefined threshold, the sensor outputs a digital or analog HIGH signal to the microcontroller.

B. Microcontroller Processing

The microcontroller (Arduino UNO/ESP32) receives the sensor signal and processes it. A conditional logic block in the firmware distinguishes between normal environmental fluctuations and actual fire-related threats. Upon confirming a fire event, the controller simultaneously triggers the local alarm and initiates the SMS notification sequence.

C. Local Alert

A buzzer and/or LED indicator is activated immediately to alert occupants on the premises, enabling swift manual evacuation and response. The LCD display simultaneously shows the nature and location of the detected threat.

D. SMS Notification

The ESP32 module is commanded to send a pre-composed SMS to one or more registered phone numbers. The message reads: " Fire has broken out on block. Smoke sensed on block" The message is dispatched within seconds of detection, ensuring timely remote notification.

E. Reset & Continuous Monitoring

After the threat is cleared, the system can be manually or automatically reset to resume monitoring. Continuous polling ensures no fire event goes undetected during normal operation.

VI. SYSTEM DESIGN / DIAGRAM

The system architecture centers on an Arduino UNO microcontroller that interfaces with multiple sensors (flame sensor, MQ-2 smoke/gas sensor), a 20×4 LCD display, an active buzzer, and an ESP32 Wi-Fi module. The Proteus simulation diagram below illustrates the complete circuit schematic prior to hardware assembly.

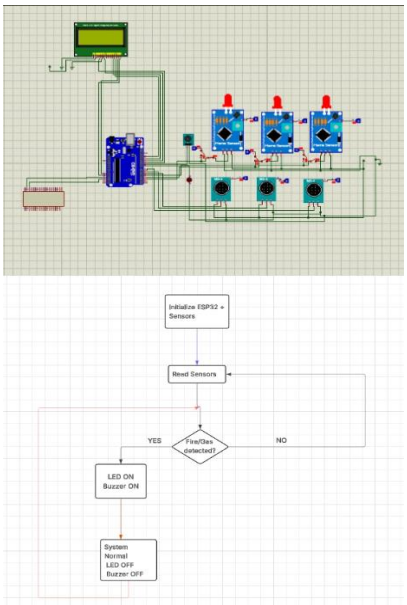

Fig. 1. Proteus Circuit Simulation & Diagram of the Fire Alarm System.

VII. BUDGET ANALYSIS

The table below presents the initial estimated budget versus the actual expenditure incurred during project implementation.

TABLE I. BUDGET ANALYSIS (BDT)

Product Name	Quantity	Price (Rough)	Price (Actual)
Arduino UNO	1	600/=	790/=
Fire Detection Module	3	60/=	75/=
Gas & Smoke Sensor	3	120/= per piece	130/= per piece
LCD Display 20X4	1	400/=	475/=
ESP 32	1	600/=	550/=
Active Buzzer	1	20/=	20/=
Total	10	1986/=	2300

Note: Actual Price includes revised unit costs.

VIII. SUSTAINABILITY CONSIDERATIONS

Sustainability has been a core design principle throughout the development of this project, approached from a multidisciplinary perspective:

Low Power Consumption — The microcontroller and sensor modules operate on low DC voltage (3.3V–5V), making the system compatible with solar panels or battery backup, reducing grid dependency.

Longevity of Components — Solid-state sensors and electronic components have long operational lifespans with minimal maintenance requirements.

Scalability — The architecture can be scaled from single-room monitoring to campus-wide networks without major redesign, reducing the need for complete system overhauls.

Reusability — Open-source hardware and software platforms (Arduino IDE) allow the system to be reprogrammed and repurposed for other safety applications.

Economic Accessibility — The use of affordable, widely available components promotes broader adoption, particularly in low-income communities with limited access to commercial fire safety solutions.

IX. ENVIRONMENTAL IMPACT

The Fire Alarm System contributes positively to environmental protection in several key ways:

- Prevention of Fire-Related Pollution: Rapid response helps prevent large-scale fires that release harmful CO_2, CO, particulate matter, and toxic gases into the atmosphere.
- Protection of Ecosystems: Early fire detection in forested or agricultural areas can prevent the destruction of vegetation and wildlife habitats.
- Reduction of Chemical Firefighting Agents: Faster alerts lead to faster human intervention, reducing the volume of chemical suppressants needed, thereby minimizing soil and water contamination.
- Minimal Electronic Waste: The compact design uses minimal electronic components, generating less e-waste at the end of the product lifecycle.
- Green Energy Compatibility: The system's low power requirement allows it to function on renewable energy sources such as solar panels, aligning with green technology principles.

X. SAFETY NORMS & COMPLIANCE MEASURES

The system has been designed with adherence to established safety standards and best practices:

- Electrical Safety: All components are operated within their rated voltage and current limits. Proper insulation, fusing, and grounding have been implemented to prevent electrical hazards.
- Sensor Calibration: Sensors have been calibrated to minimize false positives while ensuring sensitivity to genuine fire events, in line with best practices for fire detection systems.
- Alarm Audibility: The buzzer output meets minimum audibility requirements for emergency alert systems as recommended by national safety guidelines.
- GSM/Wi-Fi Communication Reliability: The ESP32 module employs retry logic to ensure message delivery even in low-signal conditions.
- Compliance with Fire Safety Codes: The system design is aligned with general principles of national fire alarm codes (e.g., NFPA 72 — National Fire Alarm and Signaling Code, or equivalent local standards).
- User Safety during Testing: All testing procedures were conducted in controlled environments to prevent unintended harm to personnel or property.

XI. STAKEHOLDERS / BENEFICIARIES

The following groups stand to benefit directly or indirectly from this project:

- Homeowners & Residents: Gain peace of mind through real-time remote alerts, especially useful when away from home.
- Commercial Business Owners: Protect valuable assets, inventory, and infrastructure from fire damage with minimal investment.
- Industrial Facility Managers: Safeguard hazardous production environments where fire risks are elevated.
- Educational Institutions: Schools, universities, and libraries can integrate the system to protect students, staff, and irreplaceable records.
- Healthcare Facilities: Hospitals and clinics housing vulnerable patients benefit enormously from rapid fire detection and notification.
- Fire & Emergency Services: Receive faster incident reports, allowing for quicker resource mobilization and response.
- Rural & Underprivileged Communities: Gain access to affordable, life-saving fire safety technology previously beyond their financial reach.

XII. SOCIETAL & ECONOMIC ISSUES WITH MITIGATION STRATEGIES

A. Societal Impact

Fire disasters are among the leading causes of death, injury, and displacement globally. This system addresses critical societal needs through early warning capability that drastically reduces casualties by providing occupants time to evacuate safely. Widespread adoption builds community-level resilience against fire disasters. The low-cost design democratizes access to fire safety technology for economically disadvantaged populations, and the project raises awareness about fire safety and the role of technology in emergency management.

B. Economic Impact

From an economic perspective, fire incidents cause enormous financial losses annually. Faster response limits structural damage and reduces insurance claims. Preventing fires in public buildings and utilities reduces the burden on government reconstruction budgets. The total system cost is a fraction of commercial fire alarm installations, making it viable for small businesses and households. Wider adoption of low-cost IoT safety systems also creates opportunities in manufacturing, installation, and maintenance sectors.

C. Mitigation Strategies

To address potential barriers to adoption, the project recommends: partnering with local government bodies for subsidized deployment in rural areas; conducting community awareness workshops on system operation and maintenance; establishing local repair and calibration networks to ensure long-term reliability; and publishing open-source firmware to allow community-driven improvements and cost reduction over time.

XIII. CONCLUSION

The Fire Alarm System with SMS Alert Notification is a practical, efficient, and impactful engineering solution that addresses a fundamental human safety challenge. By combining real-time sensing, automated local alarming, and remote SMS notification, the system ensures that fire emergencies are detected and communicated swiftly, regardless of whether occupants are present.

This project demonstrates the power of accessible electronics and IoT technologies in solving critical societal problems at

minimal cost. Its design embodies principles of sustainability, inclusivity, and reliability, making it a strong candidate for widespread adoption in homes, businesses, institutions, and public infrastructure.

Moving forward, the system can be enhanced with features such as GPS-based location tagging, cloud data logging, mobile application integration, and multi-sensor fusion for even greater accuracy and utility. Ultimately, this project reinforces the vital role of engineering innovation in building safer, smarter, and more resilient communities.

REFERENCES

[1] A. Chinchmalatpure, P. Sagar, and V. Lohe, "IoT Based Smart Fire Detection and Control System," International Journal of Engineering Research & Technology, 2023.

https://www.ijraset.com/research-paper/iot-based-smart-fire-detection-and-control-system-using-gsm-module

[2] J. Martinsson, M. Runefors, H. Frantzich, D. Glebe, R. McNamee, and O. Mogren, "A Novel Method for Smart Fire Detection System Using Acoustic Measurements and Machine Learning," Fire Technology, vol. 58, 2022.

[3] R. Sridhar and T. Sathiya, "Computer Vision Based Early Electrical Fire Detection in Video Surveillance," Journal of Physics: Conference Series, 2021.